Hillmar
Hillmar Industries Ltd.
7371 Vantage Way
Delta, BC V4G 1C9
P:604 946-7115 F:604 946-0329
info@hillmar.com www.hillmar.com

RAIL CLAMP RPTM025
CTHV-LH-150-025-W08-RP
SPECIFICATION SHEET
SLS & MKTG
ENGLISH

Sheet Number:			
Job Number:			
Form Number: 229-105-41160PT			
Company / Project Reference:	Date.:	Page.: 1 OF 1	Document Package No.: / Rev.:

Inventor Drawing

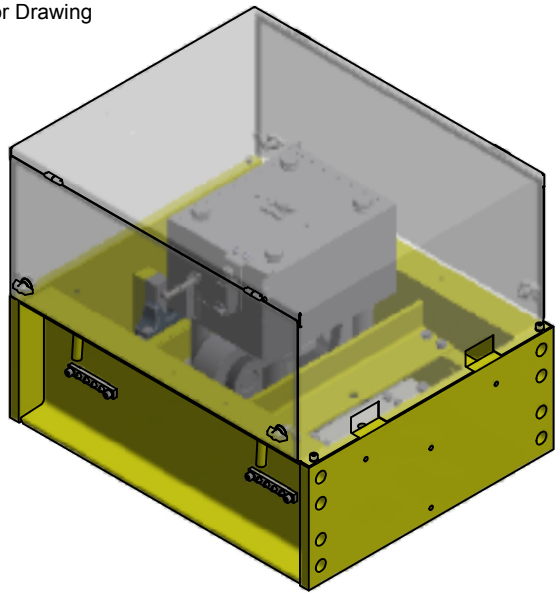

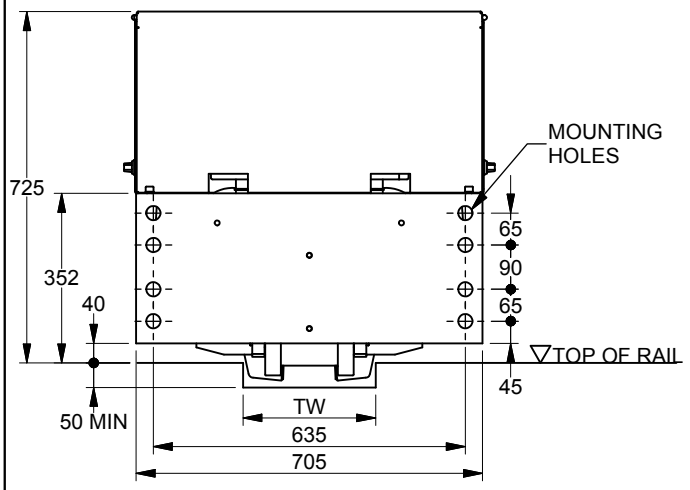

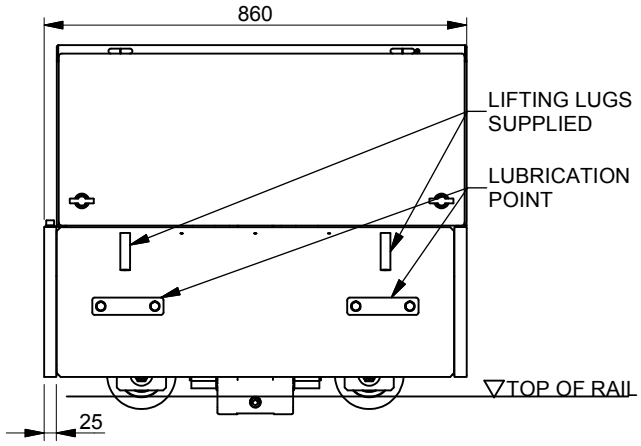

FEATURE	CODE
Rail Clamp type	CTHV-LH
Holding force	150
Coeficient of friction	025
Wedge	W08
No power unit	RP

Example for ordering	CTHV-LH-150-025-W08-RP

TECHNICAL DATA

Nominal holding force (kN)	150
Standard release pressure (MPa)	13
Maximum operating pressure (Mpa)	14.45
Cylinder volume (full stroke) (cm3)	323
Cylinder volume (working stroke) (cm3)	285
Mounting holes	8 x Ø29
Mounting bolts	8 x M 27 CL 8.8
Approximate weight (kg)	590
Mechanism - horizontal float (mm)	±25
Mechanism - vertical float (mm)	±25
Hydraulic connection	-6 37° JIC
Shipping crate (L x W x H) (mm)	1100 x 900 x 950

NOMINAL SPECIFICATION

Spring set - Hydraulically released device.

Control voltage electrical junction box connection to be drilled to suit requirements by customer.

RAIL WIDTH (mm)	MINIMUM TROUGH WIDTH TW (mm)
61 - 95	270
96 - 120	300
121 - 150	325

NOTES

All figures are nominal figures only.

All dimensions are in millimeters.

Document Template #710-101-62058

** ALL TECHNICAL DATA IS SUBJECT TO CHANGE WITHOUT NOTICE **
Hillmar works have a fully registered ISO 9001-2008 quality assurance programme (QCB #01-1525)

C:\TEMP\db880300-67dc-471b-a711-c174ab8e79d6\800000524185\HILLMAR\HILLMAR PRODUCTION\02 STORM BRAKES\0700-2\07002001 CXHV-LH\SPC-SHT-CXHV-LH\04 CTHV-XX-XXX-025-RP\41160 CTHV-LH-150-025-W08-RP.idw